COOLING SYSTEM

SERVICE TOOLS

Description	Part Number	Page
HANDLE	420 877 650	11
OETIKER PLIERS	295 000 070	6
OIL SEAL PUSHER	529 036 210	11
ROTARY SEAL INSTALLER	529 036 211	11
TEST CAP	529 035 991	5
VACUUM/PRESSURE PUMP	529 021 800	5

SERVICE PRODUCTS

Description	Part Number	Page
DOW CORNING 111	413 707 000	8
ISOFLEX GREASE TOPAS NB 52	293 550 021	11
LOCTITE 243 (BLUE)	293 800 060	12
LOCTITE 5900	293 800 066	15
LONG LIFE ANTIFREEZE	219 702 685	5, 13

ENGINE COMPONENTS

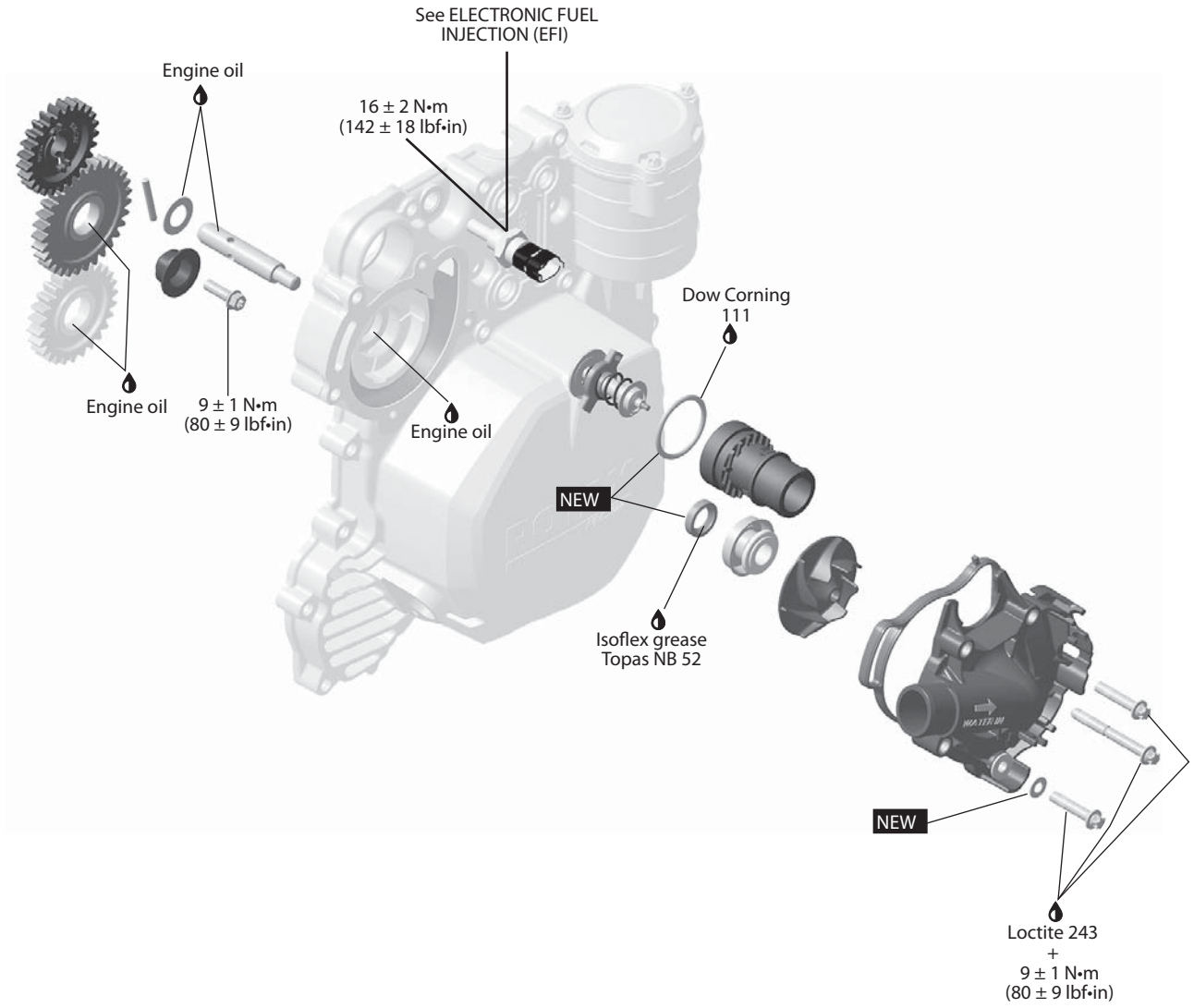

NEW = Component must be replaced when removed.

Smr2014-017-001_a

COOLANT FLOW

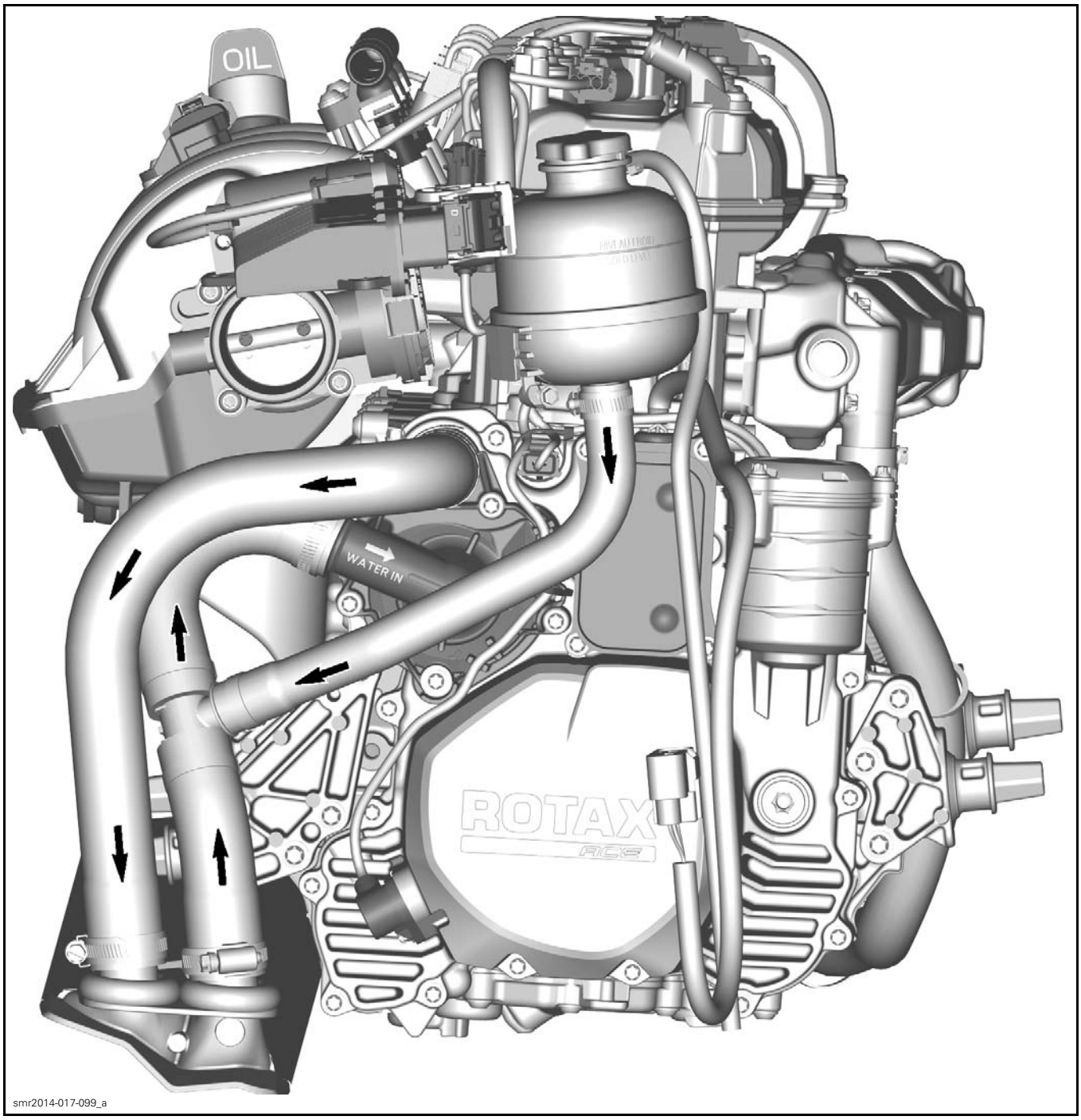

smr2014-017-099_a

VEHICLE COMPONENTS

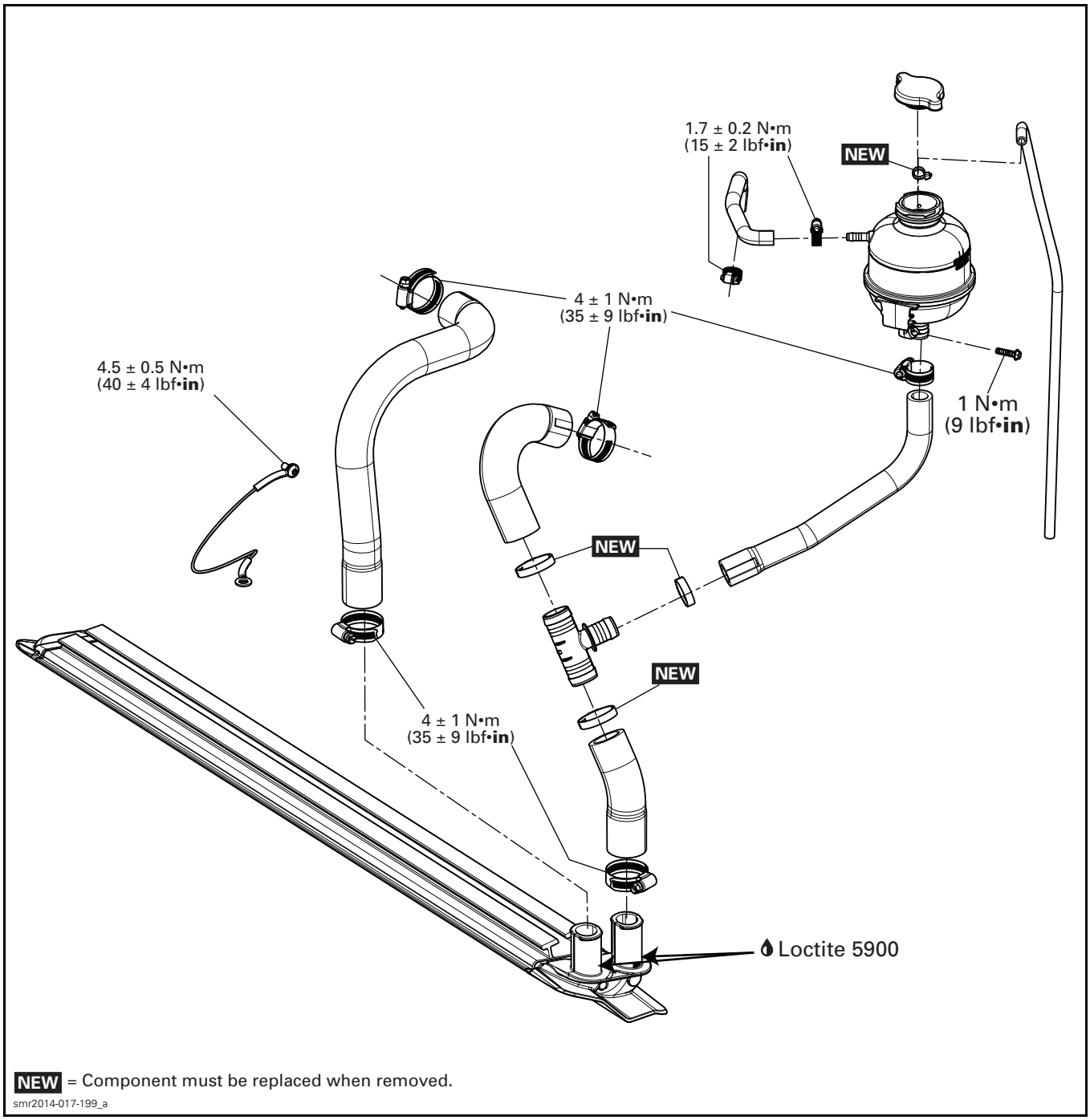

NEW = Component must be replaced when removed.

smr2014-017-199_a

GENERAL

Coolant bleed hose nipple is located on the cylinder head.

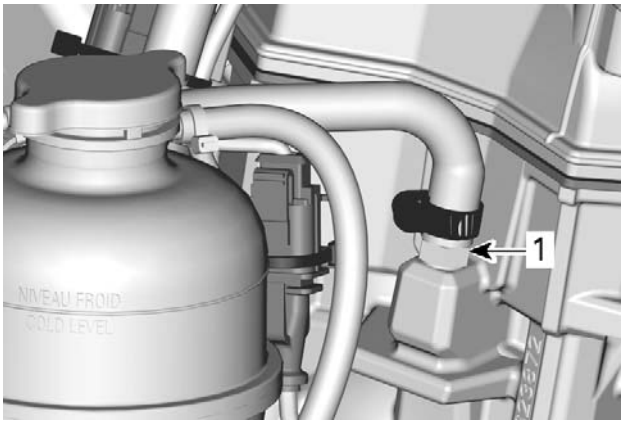

smr2014-017-100_a

1. Bleed hose nipple

NOTE: It is a good practice to check for fault codes using B.U.D.S. software as a first troubleshooting step. Refer to the *DIAGNOSTIC AND FAULT CODES* subsection.

During assembly/installation, use the torque values and service products as shown in the exploded views.

Clean threads before applying a threadlocker. Refer to *SELF-LOCKING FASTENERS* and *LOCTITE APPLICATION* at the beginning of this manual for complete procedure.

⚠ WARNING

To avoid potential burns, do not remove the coolant tank cap or loosen the cooling drain plug if the engine is hot.

⚠ WARNING

Torque wrench tightening specifications must strictly be adhered to.
Locking devices when removed (e.g.: locking tabs, elastic stop nuts, cotter pin, etc.) must be replaced with new ones.

NOTICE **Hoses, cables and locking ties removed during a procedure must be reinstalled as per factory standards.**

TECHNICAL SPECIFICATIONS

TYPE	Closed loop cooling system.
COOLANT FLOW	Flow from water pump.
TEMPERATURE CONTROL	Thermostat.
SYSTEM BLEEDING	Self-bleed type through coolant tank (hose at uppermost point of circuit).
MONITORING BEEPER	Turns on at 100°C (212°F).
COOLANT TYPE	LONG LIFE ANTIFREEZE (P/N 219 702 685)

INSPECTION

COOLING SYSTEM LEAK TEST

⚠ WARNING

To avoid potential burns, do not remove the coolant tank cap if the engine is hot.

NOTE: This test confirms if there is a leak in the cooling system, including the engine.

Pressurize cooling system through coolant reservoir.

REQUIRED TOOL	
TEST CAP (P/N 529 035 991)	Image does not exist in Documentum. OR Image from old process to be deleted.
VACUUM/PRESSURE PUMP (P/N 529 021 800)	

COOLING SYSTEM LEAK TEST
110 kPa (16 PSI)

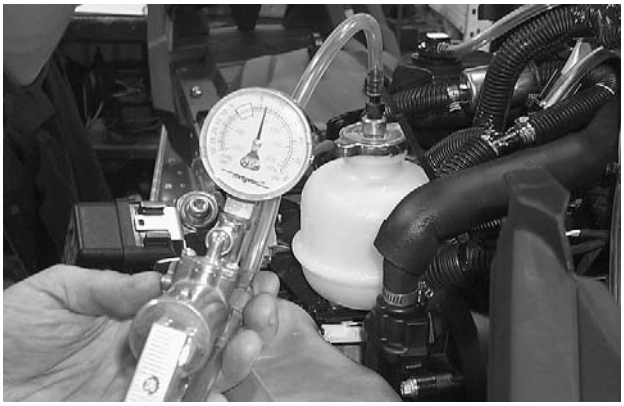

mmr2009-112-033

TYPICAL

If pressure drops, check all hoses, heat exchanger and engine for coolant leaks. Spray a soap/water solution and look for air bubbles.

Check the leak indicator hole if there is oil or coolant leaking.

NOTE: In general leaking coolant indicates a damaged rotary seal. Leaking oil indicates a damaged oil seal. If either seal is leaking, both seals must be replaced at the same time. Refer to *WATER PUMP* in this subsection.

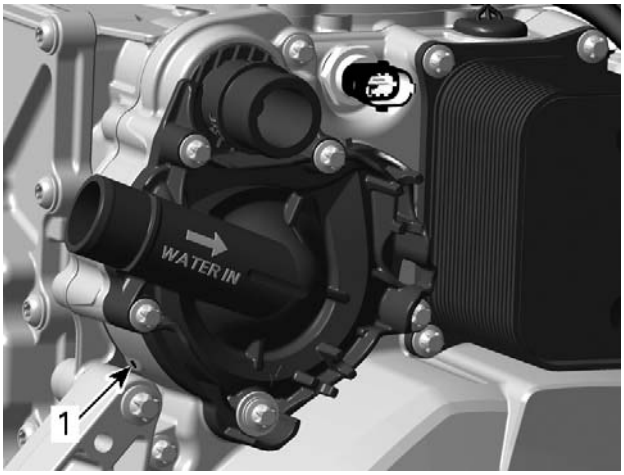

smr2014-017-002_a

1. Leak indicator hole

TROUBLESHOOTING

The following is provided to help in diagnosing the probable source of troubles. It is a guideline and should not be assumed to show all causes for all problems.

Always check for fault codes. If a fault code is detected, service the fault code first.

ENGINE OVERHEATING

1. Low coolant level.
   - *Refill and check for leaks (coolant leaking out of leak indicator hole, hoses or clamps missing or defective, or cylinder head gaskets leaks). Repair or replace.*
2. Dirty heat exchanger.
   - *Flush heat exchanger. Replace heat exchanger as required.*
3. Air in cooling system.
   - *Refill. Perform COOLING SYSTEM LEAK TEST.*
4. Defective thermostat (does not open when engine is warm up).
   - *Replace thermostat.*
5. Exhaust system clogged
   - *Flush exhaust system.*
6. Defective water pump.
   - *Inspect and replace defective components.*
7. Coolant temperature sensor defective.
   - *Check and replace if necessary. Refer to ELECTRONIC FUEL INJECTION (EFI).*
8. Wrong coolant concentration.
   - *Check and adjust coolant concentration according to BRP's recommendations or replace coolant.*
9. Defective coolant reservoir cap.
   - *Replace cap.*
10. Internal passage blocked in cooling system
    - *Inspect and clean.*

PROCEDURES

COOLANT RESERVOIR CAP

Coolant Reservoir Cap Test

Using a pressure cap tester, check the efficiency of coolant reservoir cap. If the efficiency is weak, replace the cap.

CAP OPENING PRESSURE
110 kPa ± 7 kPa (16 PSI ± 1 PSI)

CLAMPS

Clamp Replacement

To cut or secure Oetiker clamps of cooling system hoses, use the OETIKER PLIERS (P/N 295 000 070).

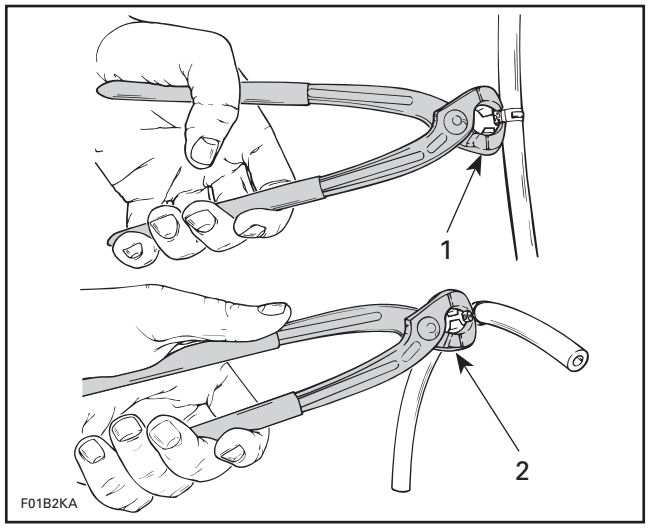

1. *Cutting clamp*
2. *Securing clamp*

NOTE: Always check general condition of hoses and clamp tightness.

THERMOSTAT

Thermostat Location

The thermostat is located on engine MAG side.

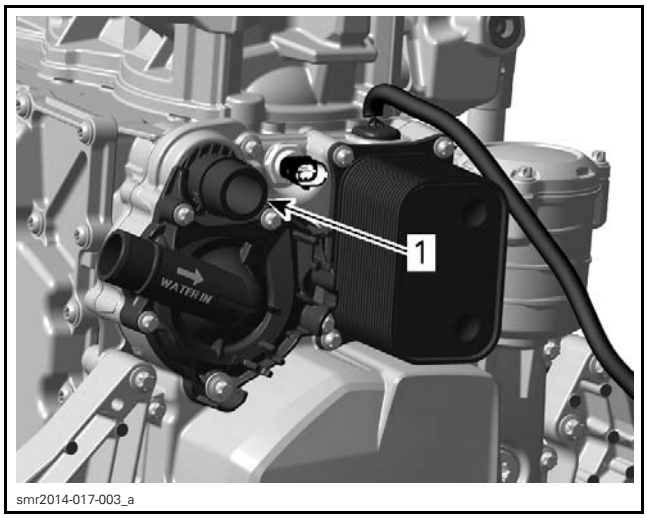

1. *Thermostat housing*

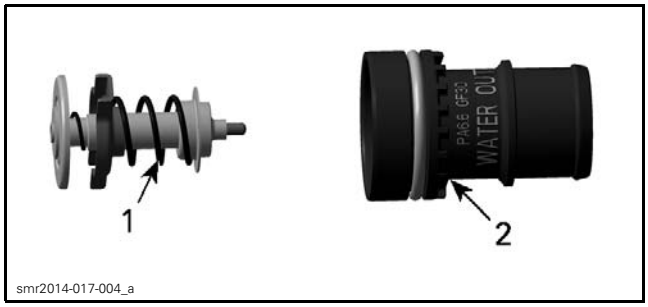

1. *Thermostat*
2. *Thermostat housing*

Thermostat Access

1. Remove central body. Refer to *BODY*.

Thermostat Removal

1. Drain engine coolant. Refer to *PERIODIC MAINTENANCE PROCEDURES* subsection.
2. Disconnect outlet hose from thermostat housing.

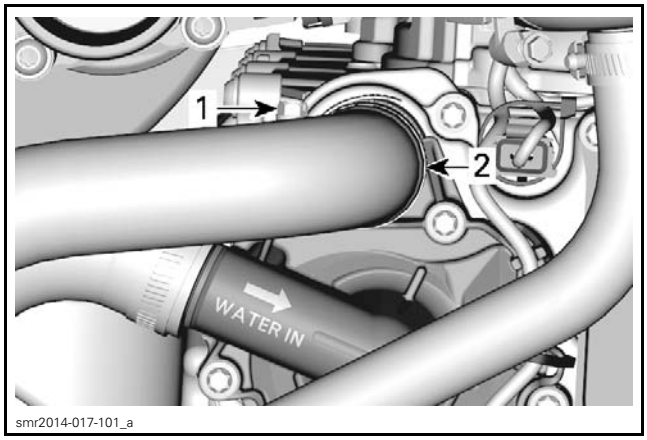

1. *Thermostat housing outlet hose clamp*
2. *Thermostat housing outlet hose*

3. Proceed with *WATER PUMP HOUSING REMOVAL*. See procedure in this subsection.
4. Remove thermostat housing then thermostat.

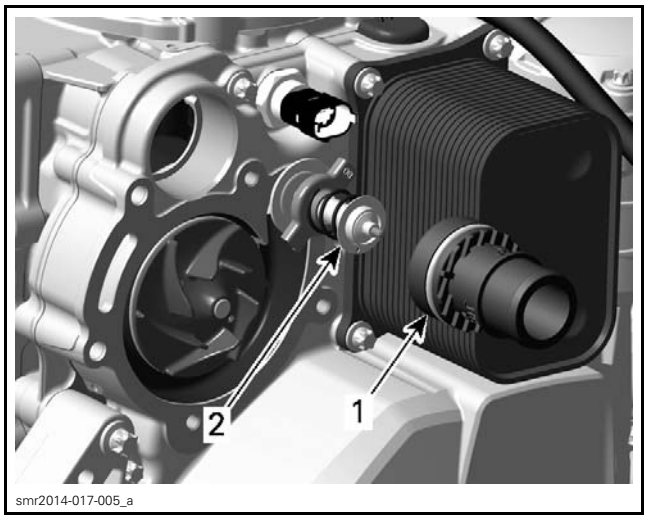

1. *Thermostat housing*
2. *Thermostat*

NOTE: Use shop rags to catch any spilled engine coolant.

Thermostat Test

To check thermostat, put it in water and heat water.

THERMOSTAT TEMPERATURE	
Starts to open	80°C (176°F)
Fully open	95°C (203°F)

Replace thermostat if out of specification.

Thermostat Installation

The installation is the reverse of removal procedure, however pay attention to the following.

Install **NEW** O-ring on thermostat housing.

Lubricate O-ring.

THERMOSTAT HOUSING O-RING	
Service Product	DOW CORNING 111 (P/N 413 707 000)

Fit thermostat in thermostat housing.

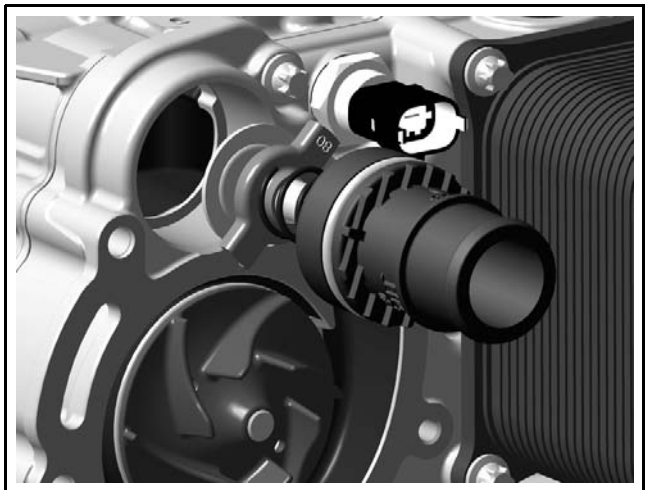

smr2014-017-006

Align both tabs of thermostat with the recess in the magneto cover.

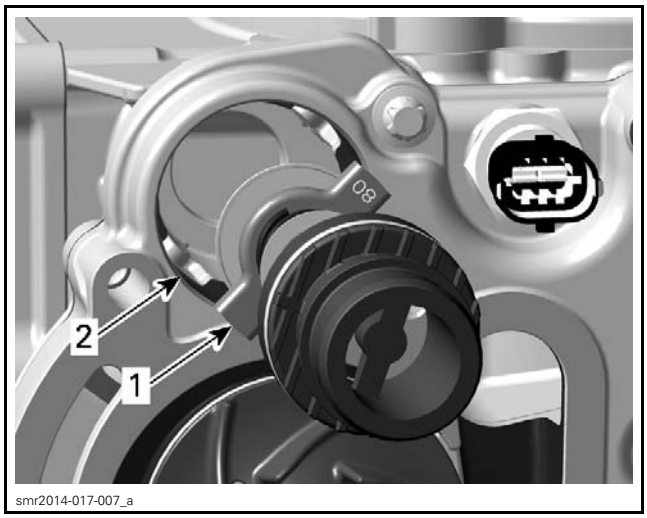

smr2014-017-007_a

1. *Thermostat tabs*
2. *Magneto cover recess*

Install water pump housing, refer to *WATER PUMP HOUSING INSTALLATION* in this subsection.

Refill and bleed cooling system. Refer to *PERIODIC MAINTENANCE PROCEDURES* subsection.

WATER PUMP

Water Pump Location

The water pump is located on engine MAG side.

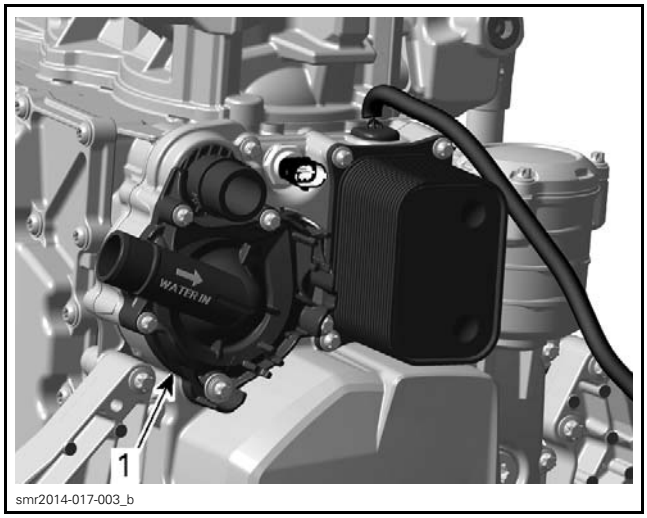

smr2014-017-003_b

1. *Water pump*

Water Pump Access

1. Remove central body. Refer to *BODY*.

Water Pump Housing Removal

1. Drain engine coolant. Refer to *PERIODIC MAINTENANCE PROCEDURES* subsection.

2. Disconnect outlet hose from thermostat housing.
3. Disconnect inlet hose from water pump.

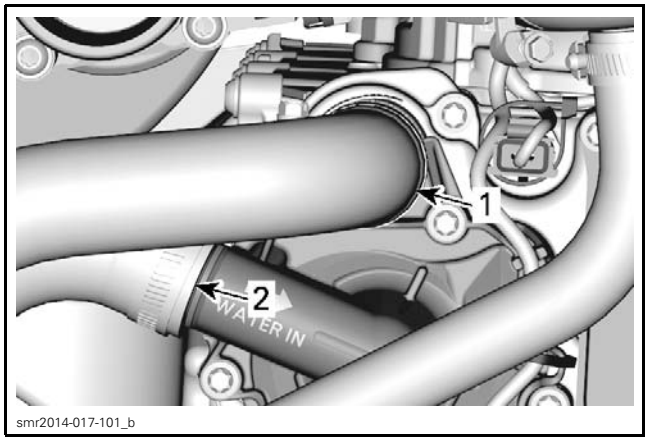

1. *Water pump outlet hose*
2. *Water pump inlet hose*

4. Remove both locking ties securing magneto wires.

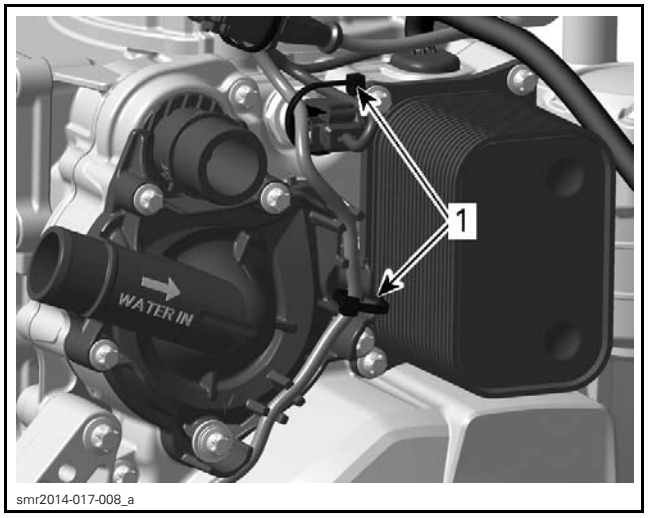

1. *Locking ties*

5. Remove retaining screws of water pump housing.
6. Discard sealing washer.
7. Remove water pump housing from magneto cover.

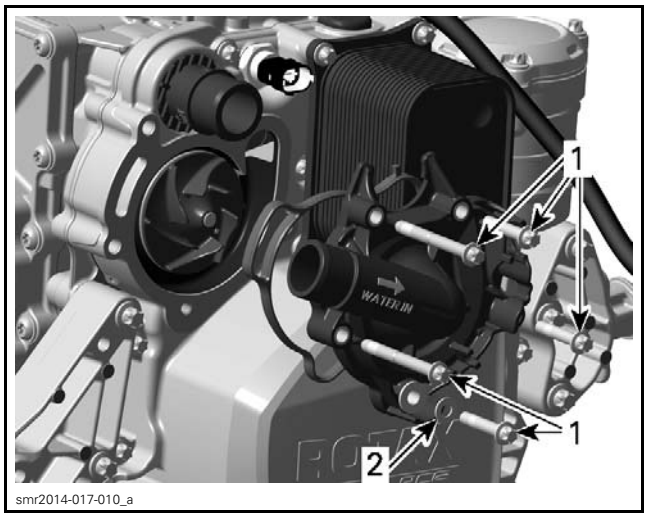

1. *Retaining screws*
2. *Sealing washer*

NOTE: Use shop rags to catch any spilled engine coolant.

Water Pump Disassembly

1. Unscrew impeller counterclockwise using appropriate pliers.

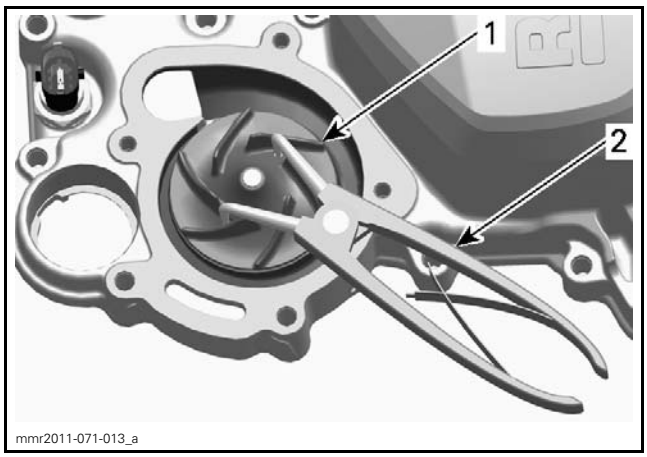

1. *Impeller*
2. *Pliers*

2. Remove magneto cover. Refer to *MAGNETO AND STARTER* subsection.
3. Remove the following components from magneto cover:
   – Water pump gear
   – Needle pin
   – Thrust washer.

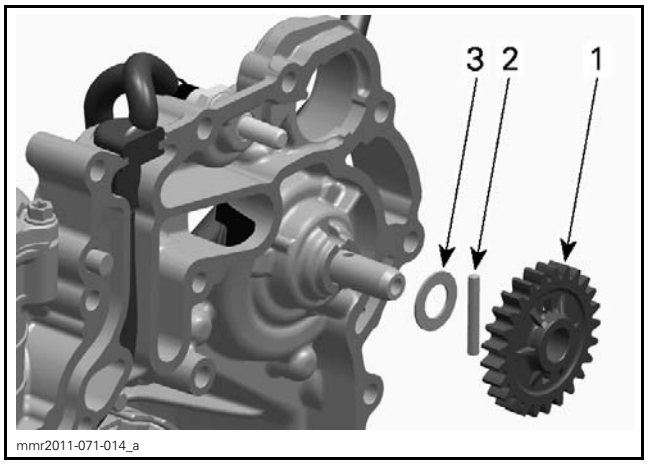

1. *Water pump gear*
2. *Needle pin*
3. *Thrust washer*

4. Remove water pump shaft using a plastic mallet.

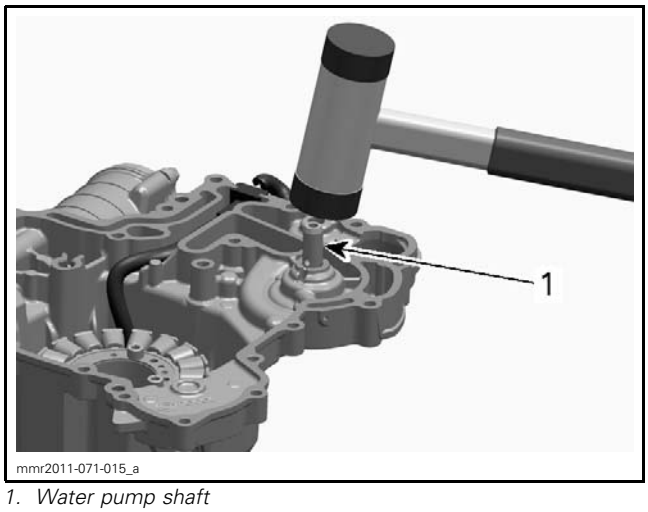

1. *Water pump shaft*

5. Remove the following components from magneto cover:
   – Oil seal
   – Remaining parts of rotary seal.

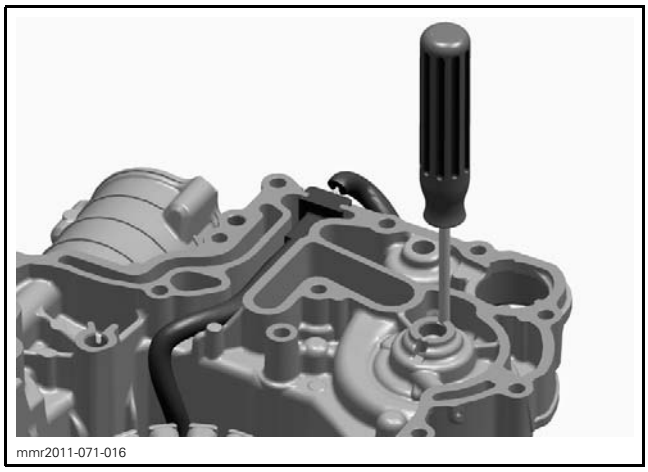

NOTICE **Be careful not to damage the surface of the rotary seal bore in the magneto cover.**

6. Separate rotary seal from water pump shaft.

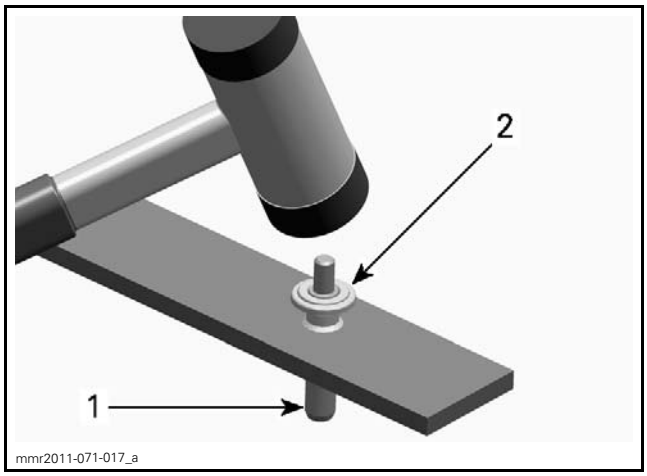

1. *Water pump shaft.*
2. *Rotary seal*

Water Pump Inspection

Check area of water pump housing for cracks or other visible damage.

Check water pump gear for wear or broken teeth.

Check if housing gasket is brittle, hard or damaged.

Check water pump shaft for visible damage.

Replace parts if necessary.

Water Pump Assembly

NOTE: Always replace oil seal and rotary seal at the same time.

1. Clean rotary seal surface from old sealant.

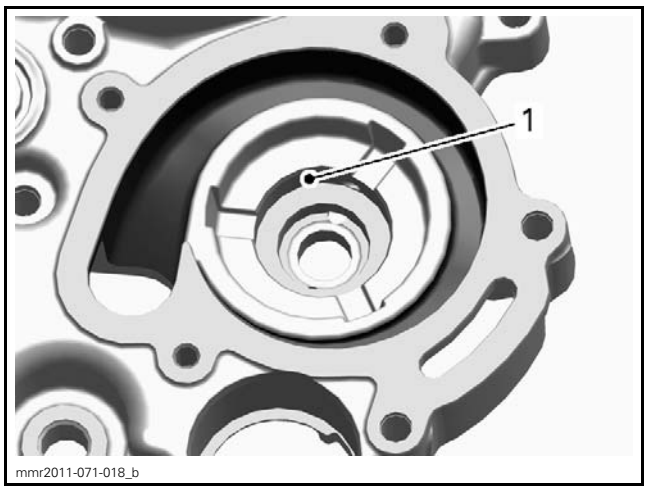

1. *Clean surface*

2. Apply engine oil on the press fit area of oil seal.

NOTICE Never use engine oil on the press fit area of the rotary seal.

3. Install **NEW** oil seal.

REQUIRED TOOL	
OIL SEAL PUSHER (P/N 529 036 210)	
HANDLE (P/N 420 877 650)	

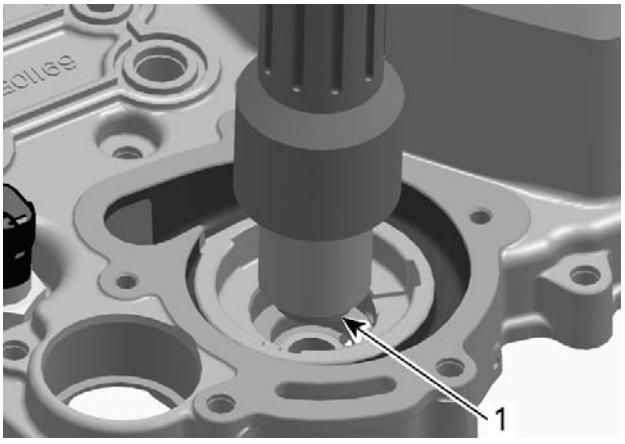

mmr2011-071-020_a

1. *Oil seal*

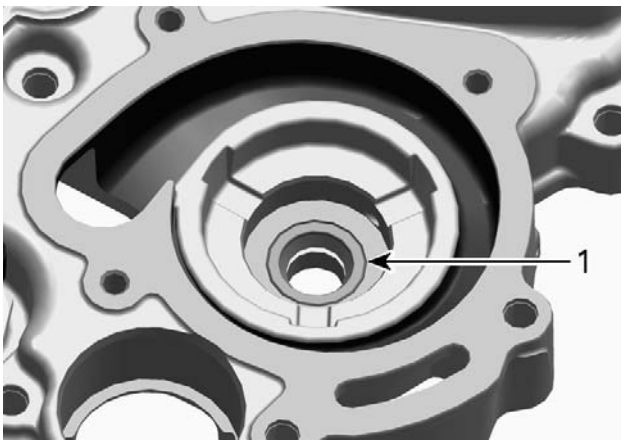

mmr2011-071-039_a

1. *Oil seal correctly installed*

4. Lubricate sealing lip of the oil seal.

OIL SEAL	
Service Product	ISOFLEX GREASE TOPAS NB 52 (P/N 293 550 021)

5. Install **NEW** rotary seal.

NOTE: Prior to installing, ensure that press fit sealing of rotary seal is not damaged.

REQUIRED TOOL	
Press	
ROTARY SEAL INSTALLER (P/N 529 036 211)	

NOTICE Never use a hammer for rotary seal installation. Only use a press to avoid damaging the ceramic component.

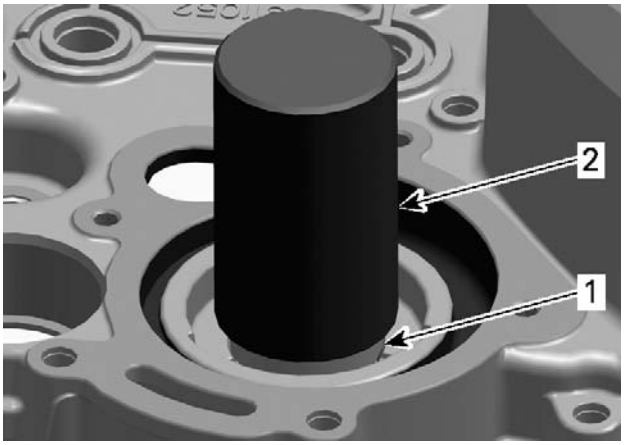

mmr2011-071-025_a

1. *Rotary seal*
2. *Rotary seal installer*

6. Assemble the following components onto water pump shaft.
   - Needle pin
   - Thrust washer.

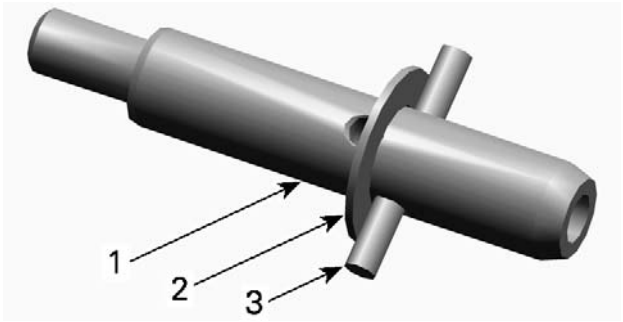

mmr2011-071-040_a

1. *Water pump shaft*
2. *Thrust washer*
3. *Needle pin*

7. Slide water pump shaft into rotary seal using a press.

NOTE: To avoid damaging the rotary seal and to achieve the proper preload support the rotary seal with the ROTARY SEAL INSTALLER (P/N 529 036 211)

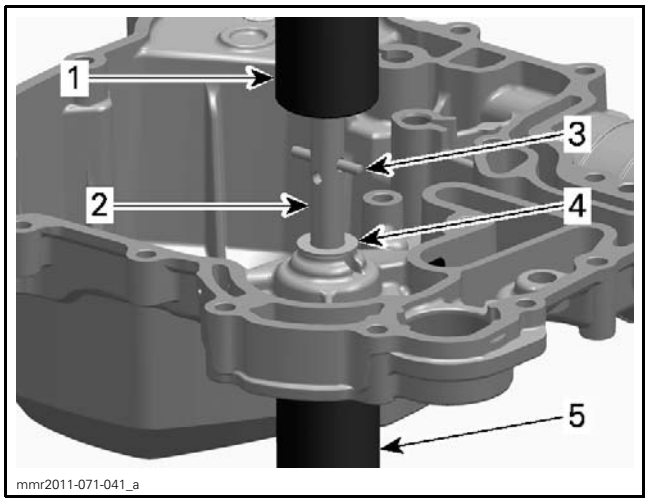

1. *Press*
2. *Water pump shaft*
3. *Needle pin*
4. *Thrust washer*
5. *Rotary seal installer*

8. Carefully press water pump shaft until needle pin touches thrust washer.

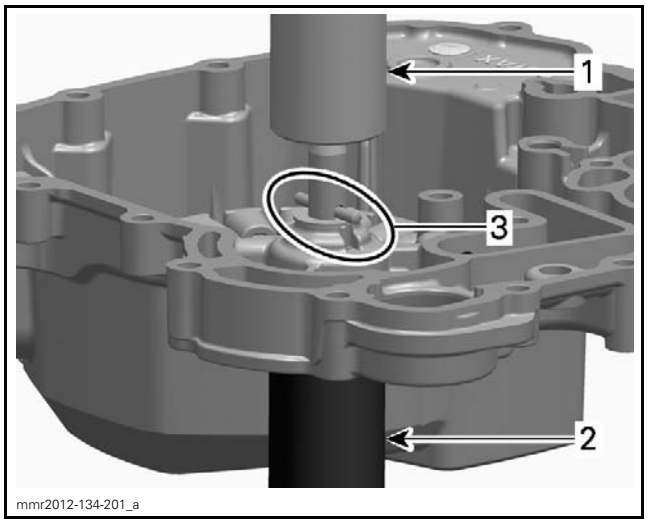

1. *Press*
2. *Rotary seal installer*
3. *Needle pin touches thrust washer*

NOTICE **Never use a hammer to install water pump shaft into rotary seal.**

NOTE: After installation, water pump shaft must rotate freely.

9. Screw impeller clockwise using appropriate pliers.

NOTICE **Be careful not to damage impeller wings during its installation.**

10. Install magneto cover. Refer to *MAGNETO AND STARTER* subsection.

Water Pump Housing Installation

The installation is the reverse of the removal procedure. However, pay attention to the following.

NOTICE **To prevent leaking, take care that the new gasket is exactly in groove when you reinstall the water pump housing.**

Install a NEW sealing washer on drain screw.

Tighten water pump housing retaining screws to specification as per the following procedure.

WATER PUMP HOUSING RETAINING SCREWS	
Service product	LOCTITE 243 (BLUE) (P/N 293 800 060)
Tightening torque	9 N•m ± 1 N•m (80 lbf•**in** ± 9 lbf•**in**)

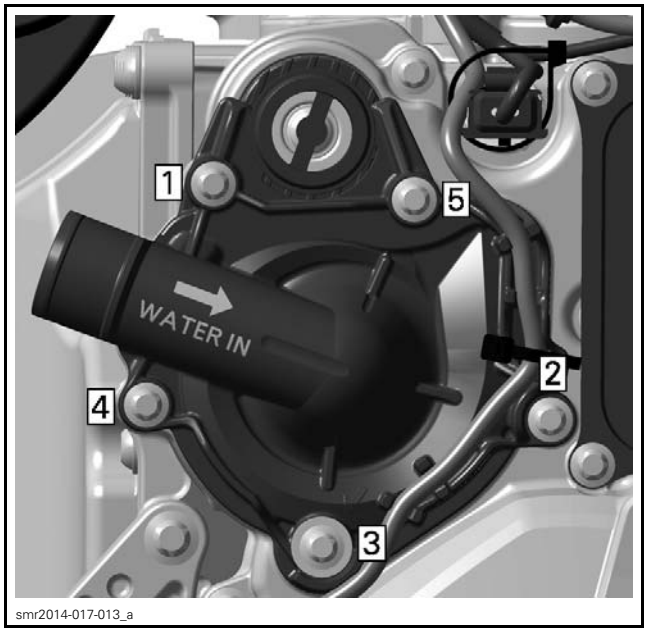

TIGHTENING SEQUENCE

Tighten coolant hose clamps to specification.

TIGHTENING TORQUE	
Coolant hose clamps	4 N•m ± 1 N•m (35 lbf•**in** ± 9 lbf•**in**)

WATER PUMP DRIVE GEAR

Water Pump Drive Gear Location

The water pump drive gear is located behind the magneto cover.

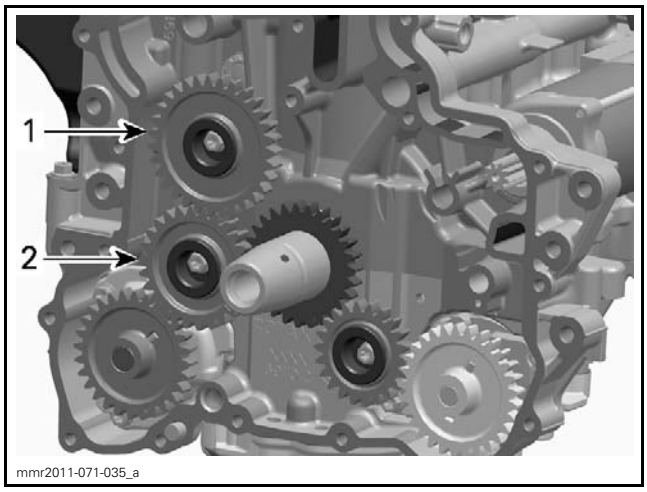

1. *Water pump drive gear 31 T*
2. *Intermediate gear, refer to LUBRICATION SYSTEM*

Water Pump Drive Gear Access

Refer to *MAGNETO AND STARTER* subsection and remove:

– Magneto cover
– Magneto flywheel.

Water Pump Drive Gear Removal

1. Remove screw securing water pump drive gear.
2. Remove bearing sleeve.
3. Slide off water pump drive gear.

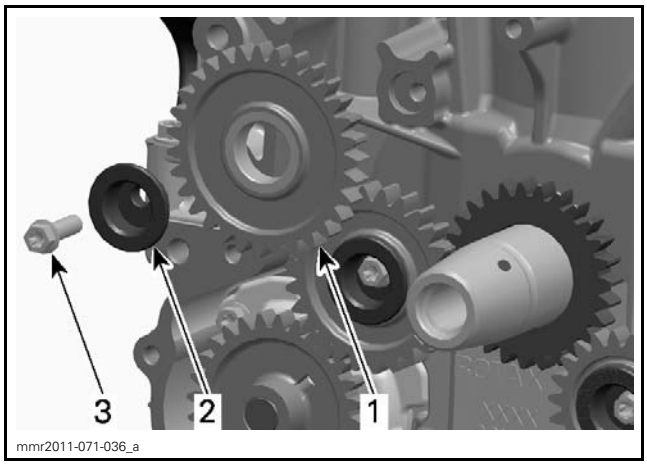

1. *Water pump drive gear 31 T*
2. *Bearing sleeve*
3. *M6 x 20 screw*

Water Pump Drive Gear Inspection

Inspect gear for wear or other damage.

Replace gear if necessary.

Water Pump Drive Gear Installation

The installation is the reverse of the removal procedure. However, pay attention to the following.

Apply engine oil on bearing sleeve.

Tighten water pump drive gear retaining screw to specification.

WATER PUMP DRIVE GEAR RETAINING SCREW	
Tightening torque	9 N•m ± 1 N•m (80 lbf•**in** ± 9 lbf•**in**)

HEAT EXCHANGER

Heat Exchanger Inspection

Inspect Heat exchanger for leaks, cracks or sediments. Replace if necessary.

Heat Exchanger Cleaning

NOTICE **Cleaning the cooling system as per the following procedure should be performed when cooling system is contaminated, or fouling is suspected. It is not necessary to clean the cooling system if the same LONG LIFE ANTIFREEZE (P/N 219 702 685) (orange color) is used for refilling or replacing.**

1. Start with a **cool** engine.
2. Completely drain coolant. Refer to *PERIODIC MAINTENANCE PROCEDURES*.
3. Add coolant system flushing agent according to instructions.
4. Run the engine according to flushing agent instructions. Allow the engine to cool.
5. Drain flushing agent.
6. Add demineralized water to the cooling system and run the engine according to flushing agent instructions to clear out the system flushing agent. Allow engine to cool.
7. Drain demineralized water.
8. Refill the cooling system with the recommended type and quantity of coolant. Refer to *PERIODIC MAINTENANCE PROCEDURES*.
9. Start the engine and test for proper operation of cooling system.

Heat Exchanger Removal

Air intake system and other components removed for clarity.

1. Remove central body. Refer to *BODY*.
2. Follow image sequence

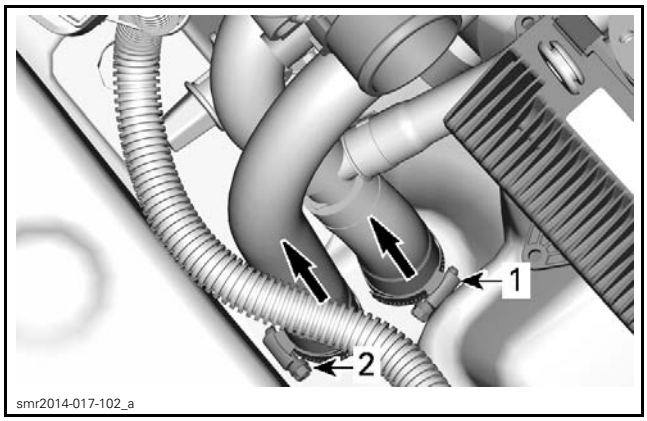

HEAT EXCHANGER REMOVAL- VIEW INSIDE HULL
1. *Heat exchanger outlet hose*
2. *Heat exchanger inlet hose*

3. Remove starboard side engine mount clamps. Refer to *ENGINE REMOVAL AND INSTALLATION*.

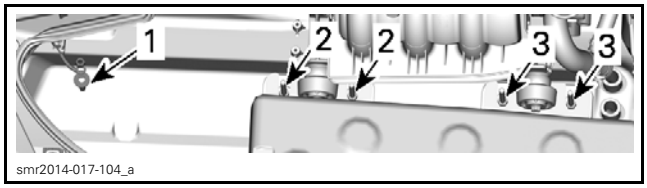

HEAT EXCHANGER CARRIAGE BOLTS
1. *Rear heat exchanger carriage bolt*
2. *Heat exchanger retaining nuts under rear engine mount clamp*
3. *Heat exchanger retaining nuts under front engine mount clamp*

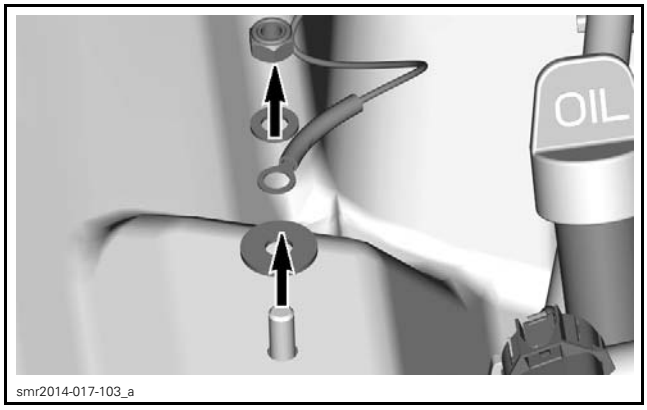

REAR HEAT EXCHANGER CARRIAGE BOLT

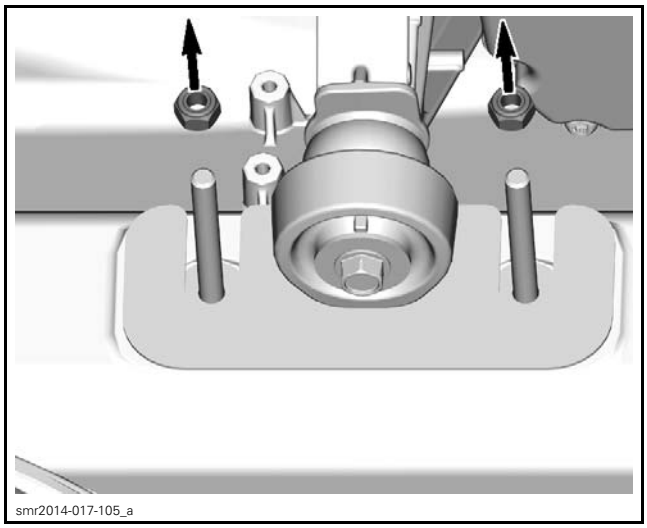

HEAT EXCHANGER RETAINING NUTS - UNDER ENGINE MOUNT CLAMP

NOTE: Shims must be re-installed in original location for proper engine alignment.

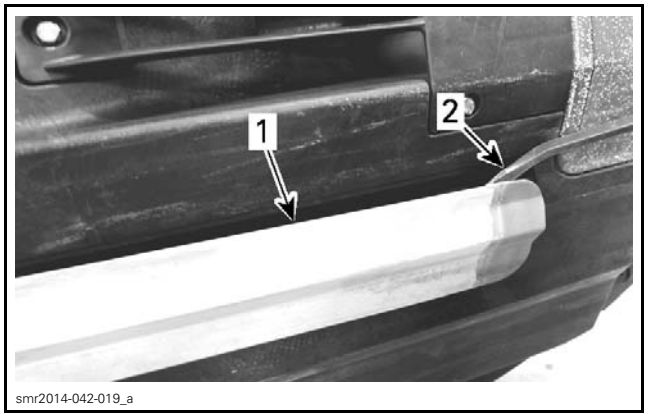

HEAT EXCHANGER- UNDER WATERCRAFT
1. *Heat exchanger*
2. *Prybar*

4. Clean off sealant residues from hull and heat exchanger.

Heat Exchanger Disassembly

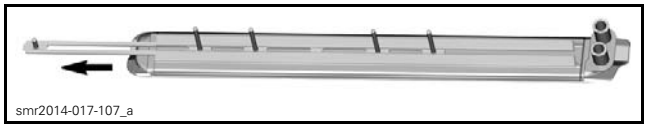

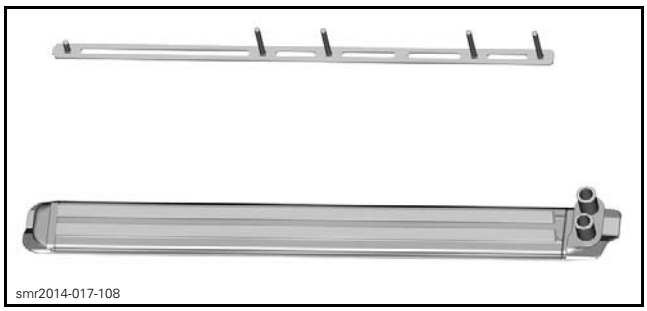

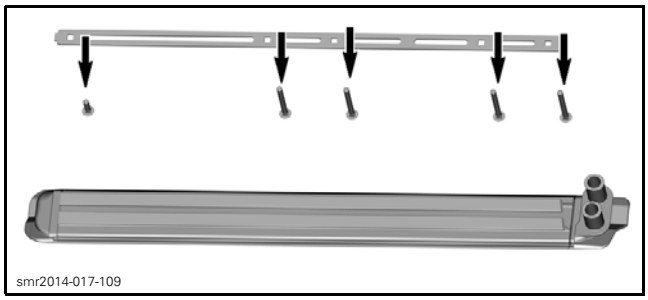

Heat Exchanger Assembly

Heat exchanger assembly is the reverse of disassembly.

Heat Exchanger Installation

1. Apply LOCTITE 5900 (P/N 293 800 066) beads as indicated.

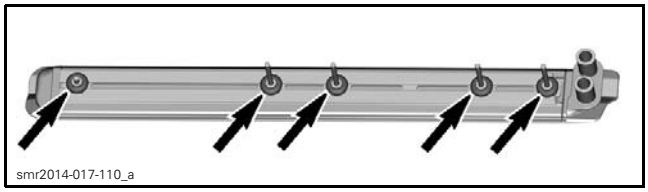

LOCTITE 5900 12 MM (15/32 IN) DIAMETER BEAD APPLICATION

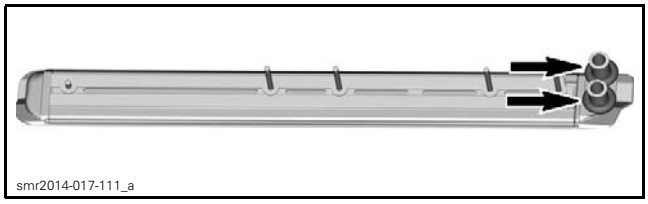

LOCTITE 5900 13.5 MM (17/32 IN) DIAMETER BEAD APPLICATION

Heat exchanger installation is the reverse of removal.

TIGHTENING TORQUE	
M8 heat exchanger retaining nuts	25 N•m ± 3 N•m (18 lbf•ft ± 2 lbf•ft)

Refill and bleed cooling system. Refer to *PERIODIC MAINTENANCE PROCEDURES* subsection.

Place watercraft in test tank and ensure no water enters the hull.